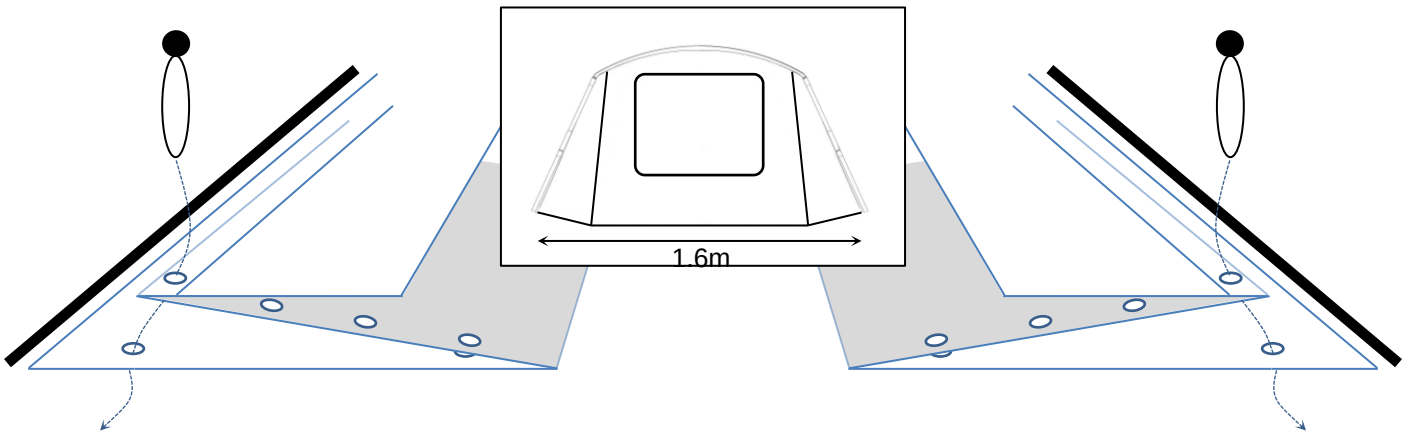

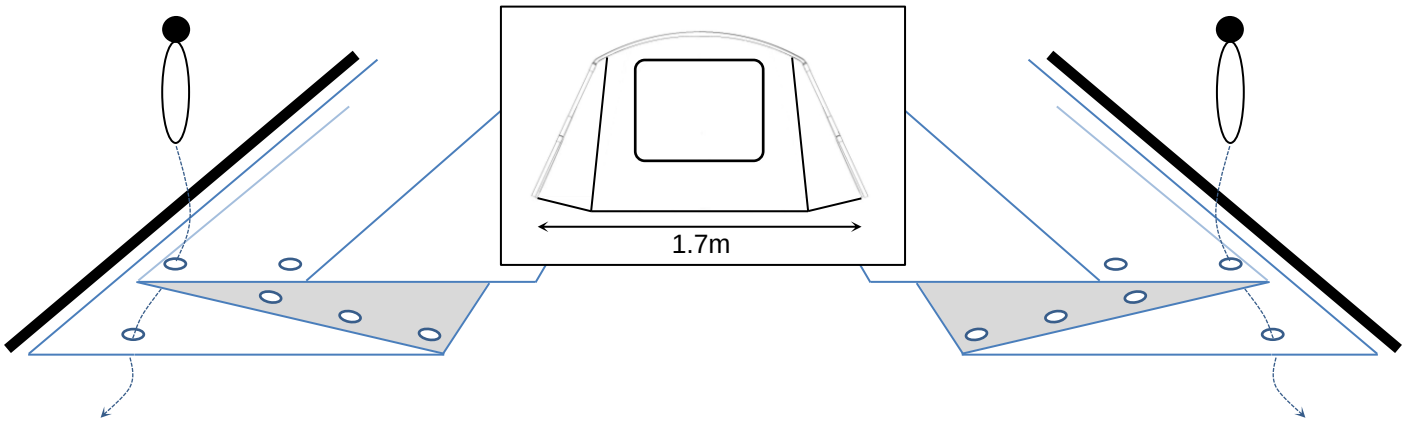

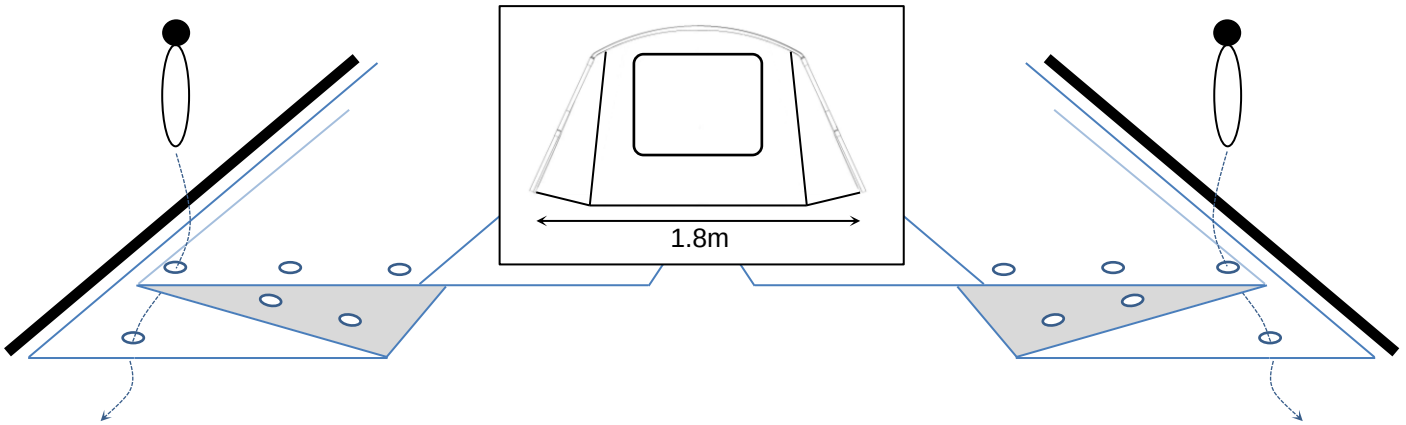

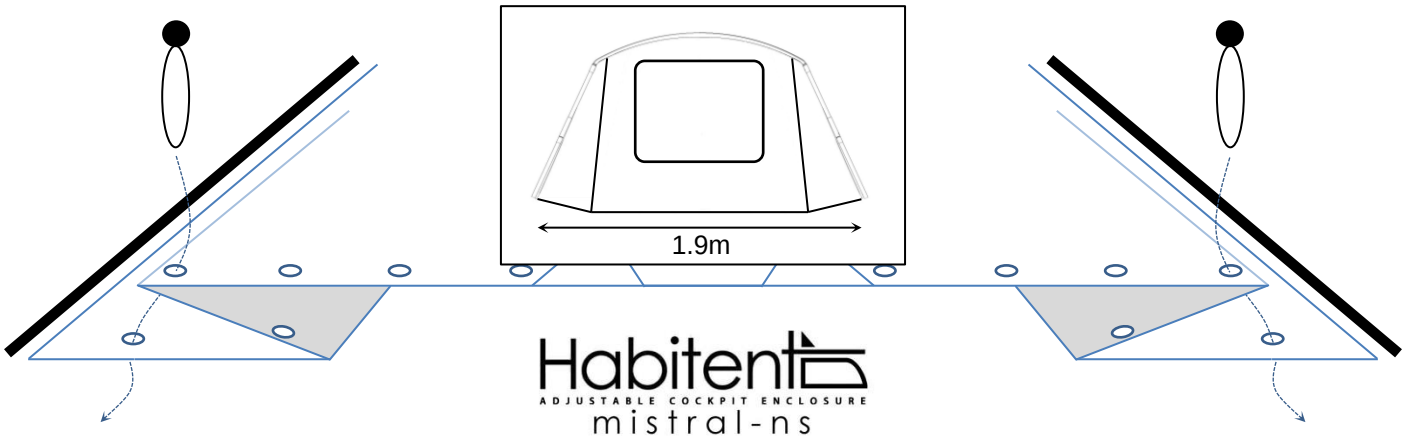

Habitent
ADJUSTABLE COCKPIT ENCLOSURE
mistral-ns